Electrolux PROFESSIONAL

High Productivity Cooking Touchline tilting kettle, gas (71652 BTU), 26 gal (100 lt) with 2" TDO valve

ITEM #

MODEL #

NAME #

SIS #

AIA #



587040 (PBOT10GCWF)	Touchline Tilting Kettle, gas, 26 gallon (100 Lt) capacity, stainless steel construction, full jacket, safety valve, safety thermostat, motor assisted tilt, 2" tangent draw-off valve, 71652 BTU

Short Form Specification

Item No.

Touchline Tilting Kettle, gas, 26 gallon (100 Lt) capacity, stainless steel construction, full jacket, safety valve, safety thermostat, motor assisted tilt, 2" tangent draw-off valve, 71652 BTU

Main Features

- Kettle is suitable to boil, steam, poach, braise or simmer all kinds of produce.
- Kettle is jacketed up to 5.27" (134 mm) from upper rim.
- Isolated upper well rim avoids risk of harm for the user.
- Ergonomic vessel dimensions, with a large diameter and shallow depth facilitates stirring and gentle food handling.
- IPX6 water resistant.
- Edge of the large pouring lip can be equipped with a strainer (option).
- Motorized, variable pan tilting with "SOFT STOP". Tilting and pouring speeds can be precisely adjusted. Pan can be tilted over 90° to facilitate pouring and cleaning operations.
- Built in temperature sensor to precisely control the cooking process.
- USB connection to easily update the software, upload/download recipes and download HACCP data.
- [NOT TRANSLATED]

Construction

- Cooking vessel in 1.4435 (AISI 316L) stainless steel featuring directional pouring lip. Double-jacket in 1.4404 (AISI 316L) stainless steel designed to operate at a pressure of 22 psi (1.5 bar).
- External panelling and internal frame made of 1.4301 (AISI 304) stainless steel.
- Double-lined insulated lid in 1.4301 (AISI 304) stainless steel mounted on the cross beam of the unit, counterbalanced by a hinge that remains open in all positions.
- 2" tangent draw-off valve.
- Safety valve avoids overpressure of the steam in the double jacket.
- Safety thermostat protects against low water level in the double jacket.
- Ergonomic and user friendly thanks to the high tilting position and the pouring lip design which allow to easily fill containers.
- Water mixing tap is available as optional accessory to make water filling and pan cleaning easier.
- Front-mounted inclined led "TOUCH" control panel with recessed deep drawn casing, features self-explanatory display functions which guide operator throughout the cooking process: simultaneous display of actual and set temperature as well as set cooking time and remaining cooking time; real time clock; "SOFT" control for gentle heating up for

APPROVAL:

Electrolux Professional, Inc.
www.electroluxprofessional.com
4003 Collins Lane Louisville, KY 40245 USA - fax number: 706-447-6228

Electrolux PROFESSIONAL
High Productivity Cooking Touchline tilting kettle, gas (71652 BTU), 26 gal (100 lt) with 2" TDO valve

delicate food; 9 power simmering levels from gentle to heavy boiling; timer for deferred start; error display for quick trouble-shooting.

- Minimised presence of narrow gaps for easier cleaning of the sides to meet the highest hygiene standards.
- Possibility to store recipes in single or multiphase cooking process, with different temperature settings.
- Can be prearranged for energy optimisation or external surveillance systems (optional).
- 98% recyclable by weight; packaging material free of toxic substances.
- [NOT TRANSLATED]
- [NOT TRANSLATED]

User Interface & Data Management

- Connectivity ready for real time access to connected appliances from remote and data monitoring (requires optional accessory – contact the Company for more details).

Included Accessories

• 1 of Food Tap Strainer Rod	PNC 910162
• 1 of Food Tap Strainer	PNC 911966
• 1 of 2" tangent draw-off valve for braising pans. Factory mounted only, increased lead time	PNC 913571

Optional Accessories

• Strainer for 26 gallon kettles	PNC 910003	❑
• Basket, for 26 gallon kettles	PNC 910023	❑
• Base plate, 26 gallon (100 liter) for kettles	PNC 910033	❑
• Food Tap Strainer Rod	PNC 910162	❑
• Left cover plate and mixing faucet for kettle (587040), and all braising pans (587037, 587039, 587031, 587035, 587027, 587028, 587021, and 587025)	PNC 911819	❑
• Food Tap Strainer	PNC 911966	❑
• Spray gun for tilting units, height 27-1/2 " (698.5mm) - factory fitted	PNC 912776	❑
• 4 flanged feet, 2", for prothermetic units (kettles, braising pans & pressure braising pans)	PNC 913438	❑
• Measuring rod for tilting kettle 26 gallon	PNC 913503	❑
• - NOT TRANSLATED -	PNC 913577	❑
• Spray gun kit for free-standing ProThermetic Tilting units H=700 - US - Field Mounted	PNC 913579	❑

High Productivity Cooking
Touchline tilting kettle, gas (71652 BTU), 26 gal (100 lt) with 2" TDO valve

Front

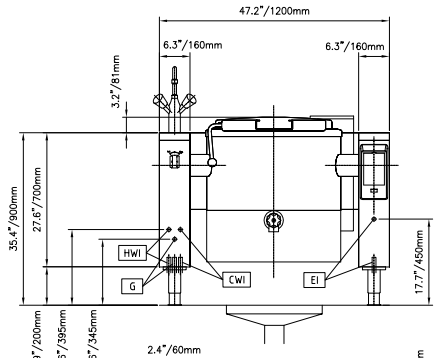

Side

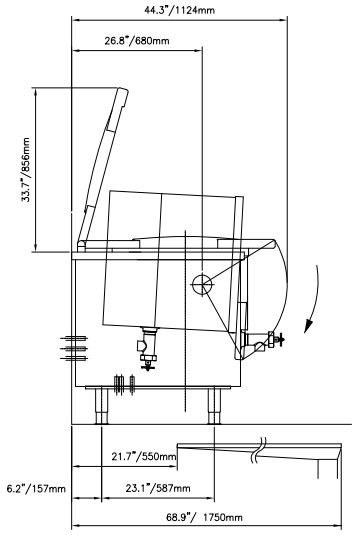

CWI1 = Cold Water inlet **HWI = Hot water inlet**

EI = Electrical connection
G = Gas connection

Top

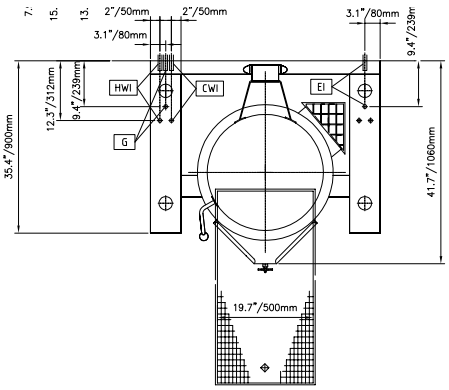

Electric

Supply voltage:	120 V/1 ph/60 Hz
Total Watts:	0.25 kW

Gas

Gas Power:	71652 Btu/hr (21 kW)
Gas Type Option:	Propane
Gas Inlet:	3/4"

Water:

Pressure:	29-87 psi (2-6 bar)

Installation:

Type of installation:	FS on concrete base;FS on feet;On base;Standing against wall

Key Information:

Working Temperature MIN:	122 °F (50 °C)
Working Temperature MAX:	230 °F (110 °C)
External dimensions, Width:	47 1/4" (1200 mm)
External dimensions, Depth:	35 7/16" (900 mm)
External dimensions, Height:	27 9/16" (700 mm)
Net weight:	507 lbs (230 kg)
Shipping width:	51 3/16" (1300 mm)
Shipping depth:	53 9/16" (1360 mm)
Shipping height:	50 3/8" (1280 mm)
Shipping weight:	822 lbs (373 kg)
Shipping volume:	79.91 ft³ (2.26 m³)
Configuration:	Round;Tilting
Heating type:	Indirect
Tilting mechanism:	Automatic

The company reserves the right to make modifications to the products without prior notice. All information correct at time of printing.

2026.11.19